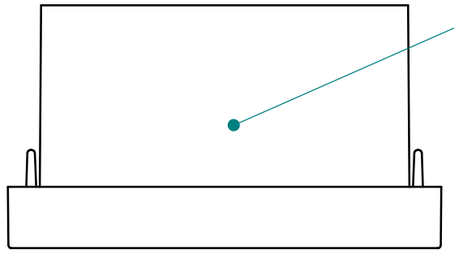

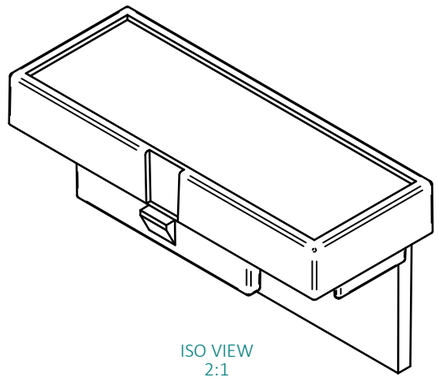

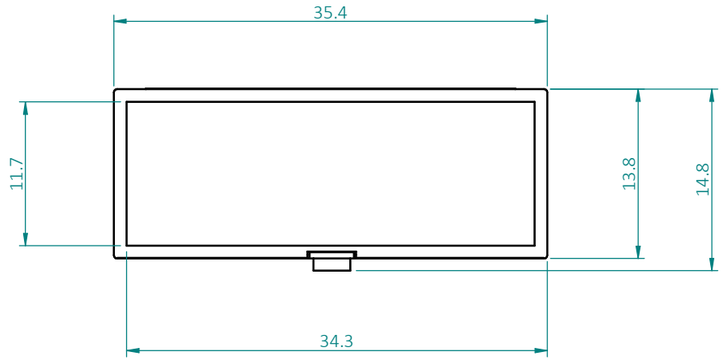

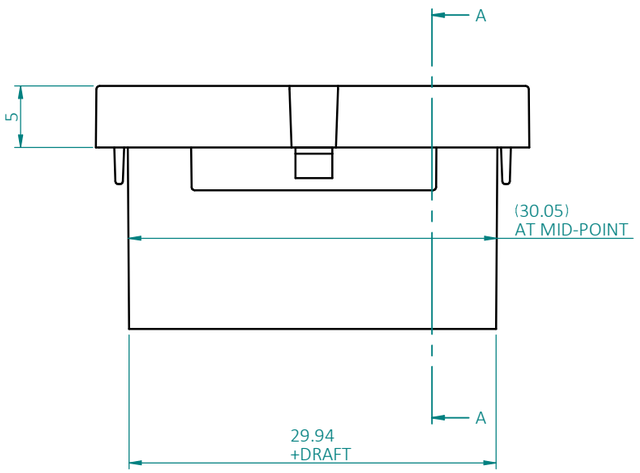

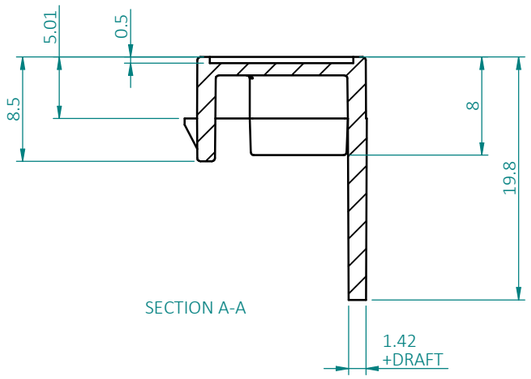

REVISION	DATE	ECR	DESCRIPTION	NAME	CHECKED
-	-	-	-	-	-
-	-	-	-	-	-
1	30/01/23	-	UPDATE BACK WIDTH FROM 28.15 TO 30mm	I.PAGANO	S. HARDINGE
O	23/06/14	-	FIRST DRAWN	I.PAGANO	-

CAMDENBOSS
CONNECT. ENCLOSE. INNOVATE.

DRAWING UNITS: MILLIMETERS
TOLERANCES: SEE CRITICAL DIMENSIONS
PROJECTION

COLOUR: SIMIALR TO RAL 7035
FINISH: EXTERNAL LIGHT-SPARK & INTERNAL STANDARD TOOL FINISH BOTH UNLESS OTHERWISE STATED ON DRAWING
MATERIAL: PC, UL94 V0 @0.6mm, GWI 875°C @ 1.0mm

GAUGE: -
DO NOT SCALE DRAWING
DEBURR AND BREAK SHARP EDGES
TITLE: DIMENSION DRAWNG FOR CNMB/2/TGS
DWG NO. CNMB_2_TGS -1

SCALE: 2:1
SHEET 1 OF 1
A3