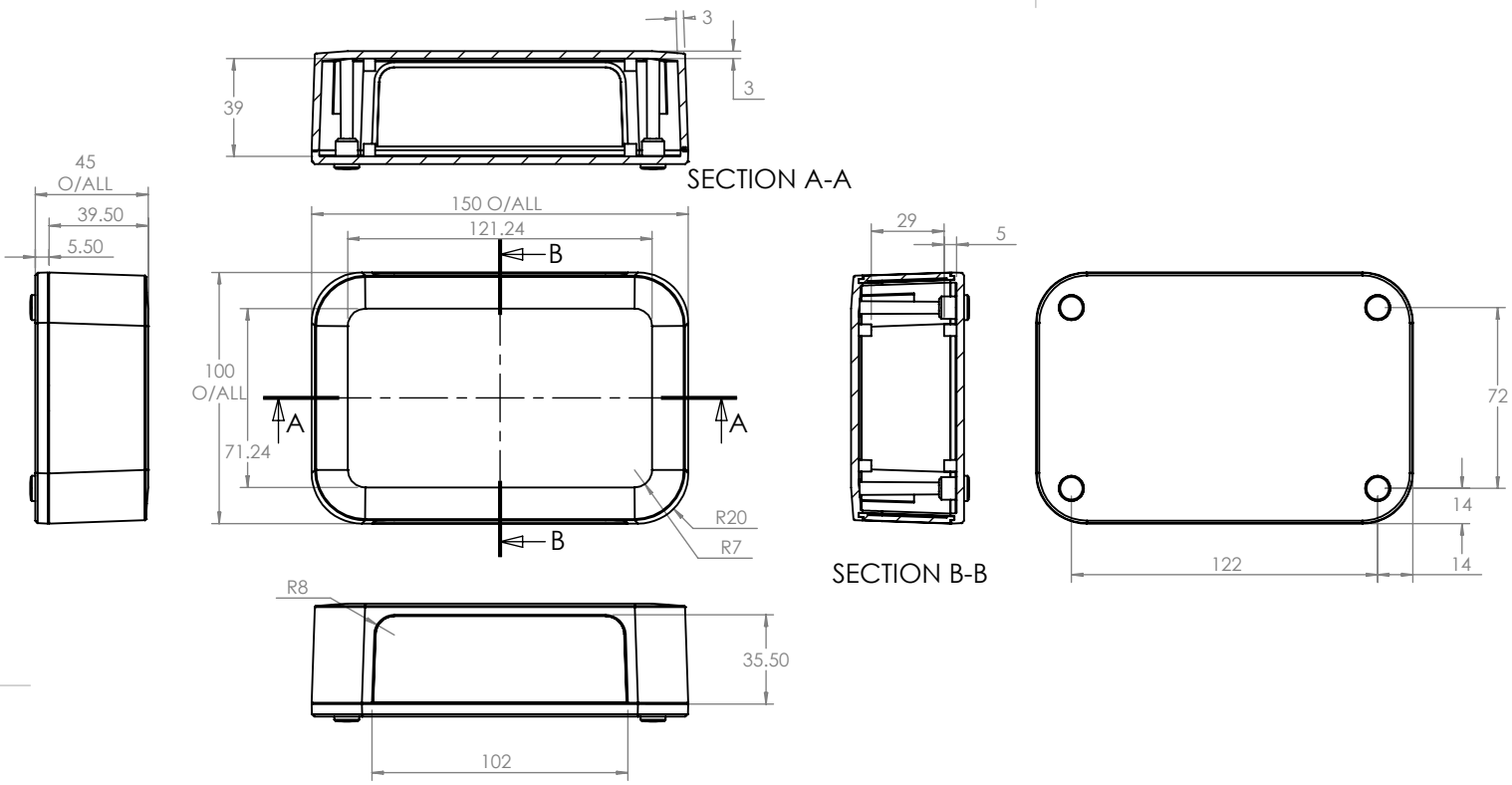

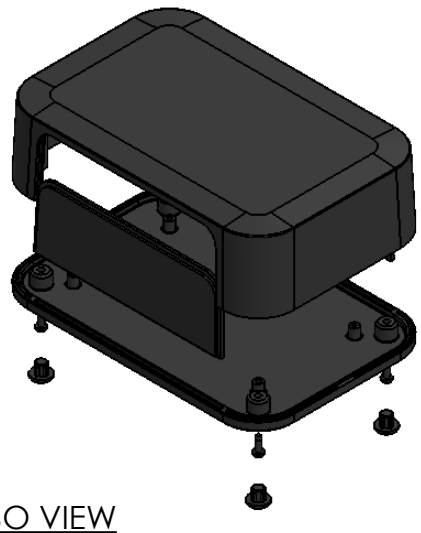

ISO VIEW
1:3

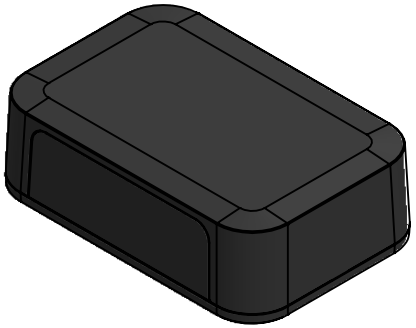

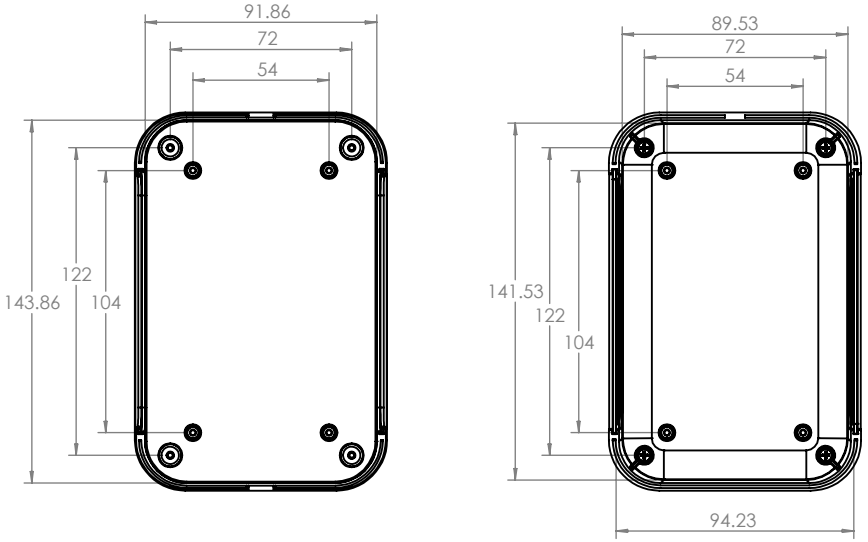

CAMDENBOSS
JAMES CARTER RD, MILDENHALL, SUFFOLK. IP28 7DE
TEL: 01638 716101 FAX: 01638 716554
EMAIL: Sales@CamdenBoss.com
WEB: www.CamdenBoss.com

	NAME	SIGNED	DATE
DRAWN	IAN PAGANO	I.P	11/03/15
CHK'D	DAN SMALLEY	D.S	16/03/15

UNLESS OTHERWISE SPECIFIED:
DIMENSIONS ARE IN MILLIMETERS

GENERAL TOLERANCES +/- 0.2

FINISH. LIGHT SPARK

MATERIAL. ABS UL 94 - V0

PROJECTION.

DO NOT SCALE DRAWING

REVISION. O

TITLE:

92 SERIES SIZE 2 COMMS BOX

DWG NO. CDE9202DG

A4

SCALE. 1:3

SHEET 1 OF 1