OVERALL ASSEMBLY DIMENSIONS:

EXTERNAL - 120 x 65 x 60

INTERNAL - 116.4 x 61.4 x 56.4

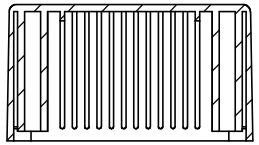

SECTION A-A

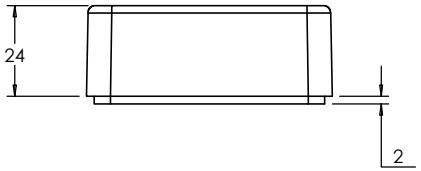


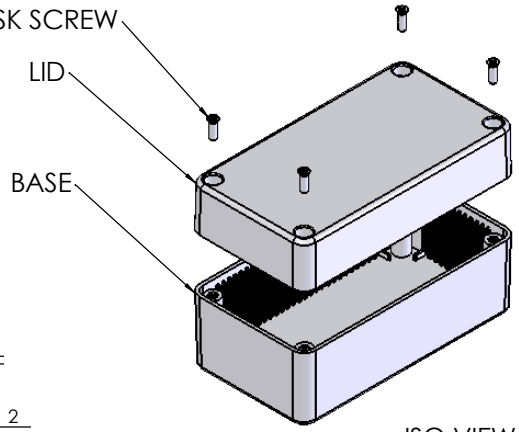


ISO VIEW
1:3

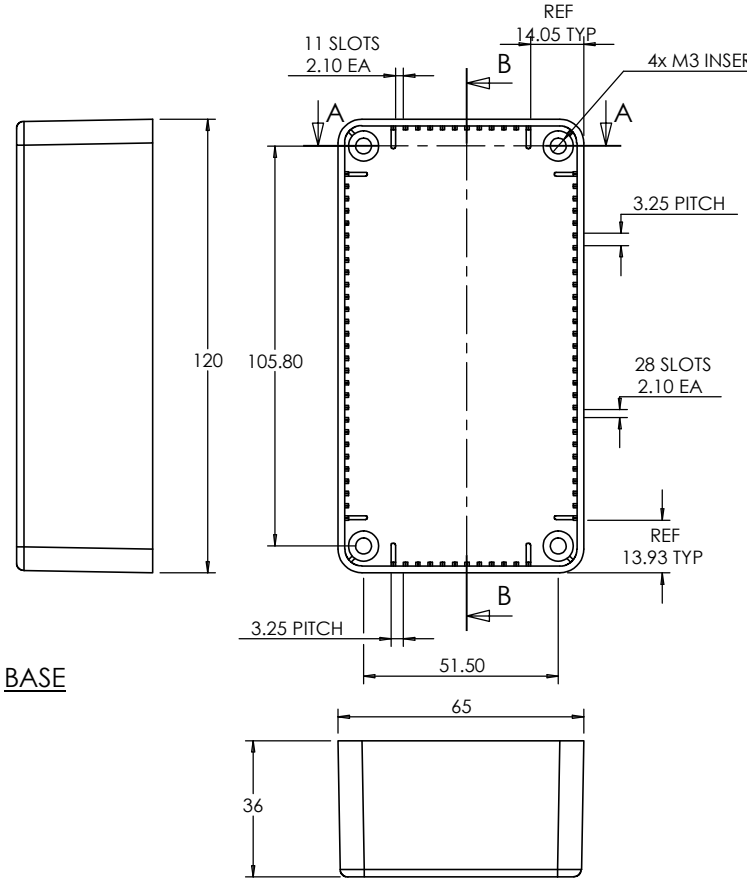


BASE

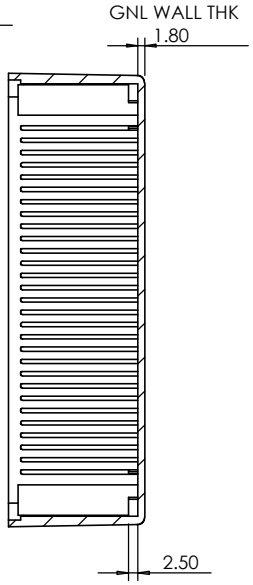


SECTION B-B

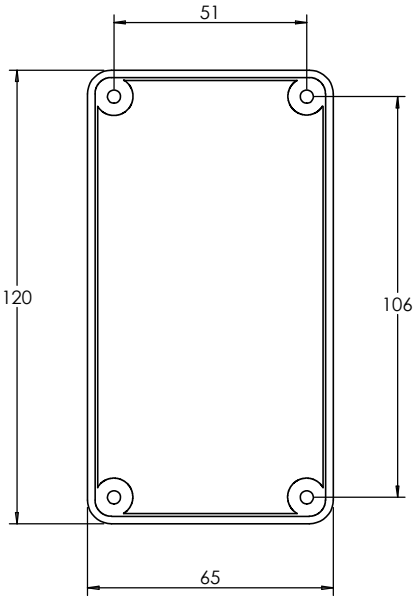


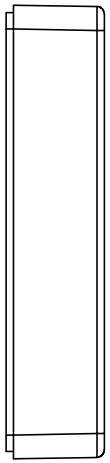

LID

CAMDENBOSS

JAMES CARTER RD, MILDENHALL, SUFFOLK. IP28 7DE
TEL: 01638 716101 FAX: 01638 716554
EMAIL: Sales@CamdenBoss.com
WEB: www.CamdenBoss.com

UNLESS OTHERWISE SPECIFIED:
DIMENSIONS ARE IN MILLIMETERS

DO NOT SCALE DRAWING

REVISION. O

TITLE: ASSEMBLY DRG FOR 2004/24

FINISH. SMOOTH

MATERIAL. ABS

DWG NO. 2004,24

A4

| | NAME | SIGNED | DATE |
|---|---|---|---|
| DRAWN | S.HARDINGE | SJH | 06/10/05 |
| CHK'D | - | - | - |

PROJECTION.

SCALE. 1 : 2

SHEET 1 OF 1